A Guide to the Australian Playground Standards

by Andrew Reedy

(January 2021)

PO Box 5063 Canning Vale South
Western Australia 6155

P | 08 9256 1441
M | 0417 971 102

E | andrew@playcheck.com.au
W | www.playcheck.com.au

A Guide to the Australian Playground Standards

Index

A Guide to the Australian Playground Standards

Introduction

The Standards are, by nature, a technical document and are not necessarily organised in a format or sequence that makes them easy to follow without significant cross referencing. Even those who spend much time working with these Standards often find themselves searching the various parts of the standard for an obscure clause that impacts the way other clauses are interpreted in a particular application. The aim of this guide is to organise the information contained in the Australian playground Standards under logical and sequential headings. For example, when determining the Free Height of Fall for each item of equipment in a playground it is necessary to go through each of the individual parts of the Standards to find the height requirements for various types of equipment. This guide collates the Free Height of Fall requirements for all types of equipment under one heading for easy reference.

The Standards applicable to playgrounds and referenced in this document are as follows:

- AS 4685.0:2017 – Playground equipment and surfacing – Development, installation, inspection, maintenance and operation
- AS 4685.1-6: 2021 (6 parts) – Playground equipment – General safety requirements and test methods + Additional specific requirements for swings; slides; runways; carousels; rocking equipment
- AS 4685.11:2012 – Playground equipment – Additional specific safety requirements and test methods for spatial networks
- AS 4422:2016 – Playground surfacing – Specifications, requirements and test method

This document does not replace the need to use or rely on the actual Standard documents, which contain detail not included in this guide. In particular, designers and manufacturers of play equipment need to be aware of all aspects and detail covered in the Standards. This guide does however provide a ready reference for many of the commonly sought elements of the playground Standards. Any opinions expressed in this document are those of the author and should not be construed to be those of Standards Australia.

Various aspects of the Standard are still open to interpretation and it should be understood that Standards serve as a guide. The Standards play an important part in the risk assessment and management of play provision, however treating them as a single or absolute requirement can lead to disproportionate and expensive corrective responses to minor issues or failures, which have minimal influence on safety.

About Play Check

Director of Play Check, Andrew Reedy, has been involved in the playground industry since 1994. During this time, he has been involved in the design and manufacture of playground equipment, as well all aspects of safety and compliance.

Since 2002 he has been a member of the Standards Australia committee for playground equipment (CS-005) and has been involved in the development all versions of AS 4685, as well as AS 4422:2016.

Andrew has represented Standards Australia on the ISO (International Standards Organisation) technical committee for playgrounds (TG 83 / WG8). He is also a member of CS-101, which deals with Standards including outdoor exercise equipment and parkour.

Play Check specialises in providing advice and auditing services to all sectors of the playground industry, in terms of playground design, safety, risk assessment and surface impact attenuation testing.

A playground defined

A playground is defined as an area designed for children's play, including the site, natural features, built landscape, and any manufactured equipment and surfacing.

The playground Standards do not include fitness equipment unless these items are integrated into the playground along with other play equipment. Outdoor fitness equipment is covered under a separate Standard, AS 16630:2020. The playground Standards do not apply to domestic playgrounds or sporting equipment.

Natural elements in a playground

Natural elements incorporated into playgrounds are inherently diverse and open-ended, and many offer the benefit that children can manipulate them for their own play purposes. Such nature-based play environments can help build creativity, imagination, and problem-solving skills. Access to nature has been shown to improve children's psychological wellbeing and encourage stewardship of the environment.

Unlike manufactured products and materials, natural elements are not necessarily predictable. They therefore encourage children to develop risk management skills as they negotiate natural environments and build resilience through exposure to falls and minor injuries as they learn to adapt their behaviour to the setting.

The requirements of the Standards do apply to natural play elements incorporated into a playground. Where the requirements of the Standard cannot sensibly be applied to natural elements, a risk benefit assessment should be undertaken and documented to determine the suitability of such elements. This risk assessment should take into account the basic principles of injury prevention that underlie the AS 4685 series of Standards.

> *Example of considerations in a risk assessment:*
> *It may not be practical or desirable to place barriers or handrails on a log or boulder (which could be construed as platforms under the definition in the Standard). In this instance, while handrails or barriers may not be used, the following considerations would be taken into account: impact-attenuated surfacing, in accordance with AS 4422:2016, should be provided in the impact area corresponding to the free height of fall; the impact area should be free of obstacles that could cause injury; hazardous situations that may cause entrapment (e.g. a forked branch that could create an entrapment hazard) should be avoided; and sharp protrusions should be removed. Consideration should also be given to preventing easy access to higher parts or potentially hazardous situations.*

It is important to recognise the value to children of engaging with nature. The incorporation of natural materials as design elements in a playground can add significant play, aesthetic and environmental value.

Risk-benefit assessment

At times, certain elements in a playground may not comply strictly with one or more of the requirements of the playground Standards. Whether in the case of older equipment not meeting current Standards, or newer equipment that deviates from the Standards in some way, a risk assessment should be conducted to determine whether the deviation is acceptable or whether remedial action should be undertaken.

A standard risk assessment involves the identification, evaluation, and estimation of the levels of risk involved in each particular situation and the likelihood of its occurrence, its comparison against benchmarks or standards, and determination of an acceptable level of risk.

The use of a risk-benefit assessment incorporates the value or benefit of the activity into this equation. A risk-benefit assessment explicitly brings together consideration of the benefits as well as the risks of play in a single judgement. Risk-benefit assessments are covered in AS 4685.0 and have been shown to be a valuable tool in determining an acceptable level of risk.

Equipment not meeting current standards

Playground inspectors with the skills and competencies to conduct such inspections should carry out regular risk assessments. When assessing old equipment that may not comply with all of the requirements of current Standards, the following steps should be taken:

1. Assess areas of non-compliance against the Standard that was applicable when the playground was installed and against current requirements that may have safety implications.
2. Determine level of risk of non-compliant items (risk/benefit assessment).
3. Determine whether there is a need for replacement or upgrade based on the risk/benefit assessment or whether the equipment is acceptable.
4. If replacement is required, determine a time frame based on the level of risk.

Inspection regimes

The following types and frequency of playground inspection are recommended in the Standards.

Playgrounds (excluding under-surfacing)

- Comprehensive post-installation inspection.
  - This may not be required on every installation. Simple items, e.g. swings, and other basic equipment may be easily assessed for compliance by the operator (if their level of understanding of Standards is sufficient) and may not require independent assessment.
- Comprehensive annual inspection.
  - Annually.
- Operational inspection.
  - Generally quarterly, but may vary depending on local circumstances.
- Routine visual inspection.
  - Frequency to be determined depending on local circumstances.

Playground impact attenuation surfacing

Unitary surfacing (e.g. rubber or synthetic grass)

- A post-installation inspection is required in accordance with the requirements of AS 4422:2016.
- Subsequently, unitary surfacing should be tested at least every 3 years.

Loose-fill surfacing (e.g. sand, wood-chip, mulch)

- Loose-fill surfaces need not be impact attenuation tested on a regular basis providing:
  1. the generic product typically complies with the requirements of AS 4422:2016 when tested; and
  2. the material is installed to a minimum depth of 300mm and is maintained to a depth of at least 200mm.

Competence of persons performing inspections

The person performing each of the inspections should have acquired through training qualifications or experience or a combination of these, the knowledge and skills enabling them to perform inspections at the various levels.

Routine Visual Inspections

Routine visual inspections are intended to identify obvious hazards that can result from wear and tear, vandalism or weather conditions. Any potentially hazardous situations shall be reported immediately and/or rectified. Routine visual inspections should include:

- ❑ Checking for and removal of debris in the playground that may be hazardous, such as broken glass or needles.
- ❑ Checking that loose-fill surfacing levels are maintained at a depth of between 200 mm and 300 mm.
- ❑ Checking for damage to unitary surfacing.
- ❑ Checking for equipment that is broken or missing as a result of use or vandalism.
- ❑ Checking for graffiti.
- ❑ Checking the condition of ancillary items, such as barbecues, tables rubbish bins, etc.
- ❑ Checking for dead overhanging branches that may potentially fall onto the playground.

Operational Inspections

Operational inspections primarily focus on items that may be affected by use and wear. They should include:

- ❑ All issues listed in Routine Visual Inspections.
- ❑ Checking for excessive wear of moving parts (including chain links).
- ❑ Ensuring that bolts and fasteners are secure.
- ❑ Checking for any protrusions and sharp edges that occur as a result of damage or wear.
- ❑ Checking the stability of all playground equipment including ancillary items. Equipment that relies on a single post, anchor or attachment point should be carefully inspected.
- ❑ Checking for excessive corrosion, particularly within structural members.
- ❑ Checking wire ropes for fraying.
- ❑ Check seat/ground clearance cableway.
- ❑ Check for damage to impact and attenuating edges of swing seats, pommels and other moving equipment that can impact users.
- ❑ Check clearances beneath carousels (where the clearance may vary over time).
- ❑ Checking foundations are adequately covered.

Comprehensive Annual Inspections

A comprehensive inspection is intended to establish the overall level of safety of the equipment, foundations and playground surfaces. This inspection includes an assessment of elements that can degrade over time.

Examples of factors that should be included in a checklist when conducting comprehensive inspections are as follows:

- ❑ Is the surfacing adequate and in good condition?
- ❑ Is the equipment in good repair (i.e. free from excessive rust, cracked welds, splintering timber, etc.)?
- ❑ Is all equipment structurally sound and stable? Equipment that relies on a single anchor or attachment point should be given special attention.
- ❑ Are all footings adequately covered?
- ❑ Is the equipment free of protrusions or sharp edges?
- ❑ Is the impact area adequate for the free height of fall?
- ❑ Is the falling space free of obstacles that could cause injury?
- ❑ Is the free space adequate for forced movement items?
- ❑ Are barriers, guardrails and handrails appropriate and at correct heights?
- ❑ Is the equipment free of entrapment hazards?
- ❑ Are all moving parts in good condition and free of excessive wear?

Categories of playground equipment

There are some variations in the requirements of the Standard based on the type of intended use of various types of equipment. These types of use are separated into the following categories:

Equipment easily accessible to all ages

- Defined as requiring only basic skills to access the equipment, allowing users to move freely and quickly onto/within the equipment, without further considerations about the use of hands and feet.

  Note: Basics skills should control the ability of a child to use a means of access. If the user needs to consider where or how to use their hands and feet when negotiating a means of access, the access should generally be considered not easy as it slows down the movement and provides time for intervention.

  Some examples of items providing easy access are:
  - Ramps
  - Stairs
  - Ladders, unless the first rung is greater than 400mm above the ground surface.

  (Requirements for ladders, stairs and ramps is found on page 27.)
- In such settings a greater level of protection against falling applies.
- Steep play elements (defined as access/egress play equipment of a gradient greater than 45° from the horizontal) are not permitted at heights above 2000mm on equipment that is 'easily accessible' to younger children.

Equipment not easily accessible

- The equipment design limits the ability to move quickly and freely onto the equipment without further considerations about the use of hands and feet. (This delayed access to the equipment gives more time for carers to intervene as appropriate.)
- In such settings a lower level of protection against falling applies.

Supervised early childhood services (SECS)

- A play area used by an education and care service for children under school age, which is supervised by educators.
- In SECS settings the maximum free height of fall is 1800mm. (See page 30 for other variations.)

Free height of fall

The free height of fall (FHoF) of any component of playground equipment is defined as the greatest vertical distance from the point of clearly intended body support to the impact area below.

The point of intended body support is also deemed to include those surfaces to which access is encouraged. For example, some features may provide hand and foot holds for climbing which, taking into account arm or leg reach distance, make it easy to climb from the intended point of support to a higher point on the equipment. These examples should not be construed to mean that everywhere to which access may be gained should be deemed as accessible, as experience has shown that capable climbers can scale almost any item. Consideration should be given to the ease of access and whether or not the configuration actually encourages access to a higher point on the equipment.

Table 1 and Figure 1 illustrate the general means of measuring the FHoF. The point of clearly intended body support for various types of use is generally measured as detailed.

Figure 2 and Table 2 detail specific methods of determining FHoF by equipment type, as well as a guide to maximum FHoF for each type. The FHoF for some individual items of equipment, particularly where forced movement is involved, varies as detailed in Figure 2.

In some cases, where forced movement occurs, the surface must have a Critical Fall Height (CFH) which is greater than the actual fall height of the equipment.

Table 1

Type of use	***Measurement basis***
Standing	From foot support to surface below.
Sitting	From seat to surface below.
Hanging (when full body support is provided by the hands only)	From hand support to surface below.
Climbing (body support is a combination of feet/legs and hands) - when easy access is provided to the top of the element	From the top of the element to the surface below.
Climbing (body support is a combination of feet/legs and hands) – when easy access is not provided to the top pf the element *Note: The reduction of 1000 mm applies when the design of the equipment limits climbing higher or if there is a sufficient distance to the top to deter climbing higher.*	From maximum hand support (max. 4000 mm) minus 1000 mm, to surface below.
Bouncing	From the suspension bed to the lowest point of falling space, plus 900mm.

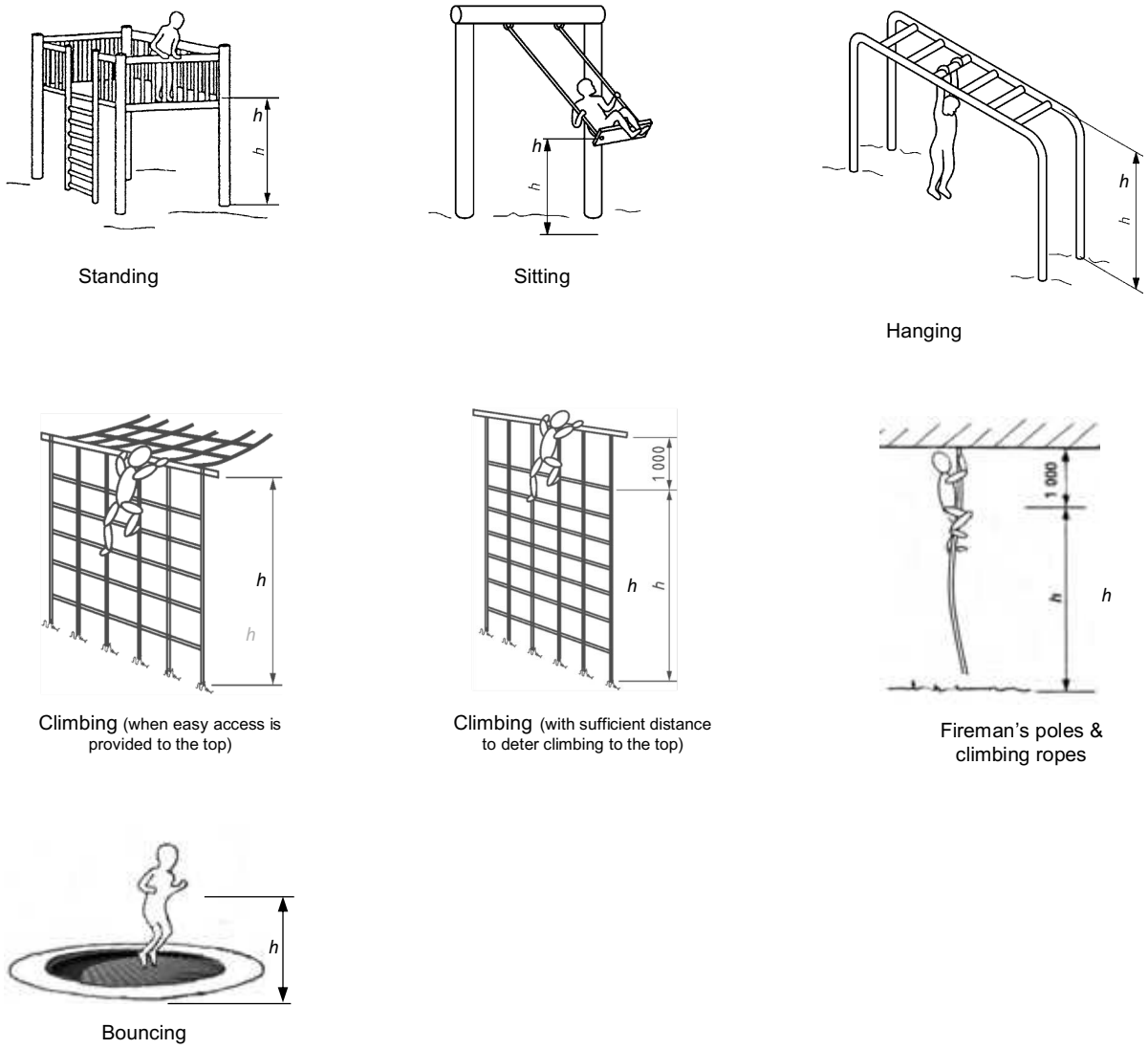

Figure 1 – General means of determining FHoF

Swings

FHoF is measured from the middle of the seat to the surface below when raised at 60° to the vertical.

This can simply be calculated using the following formula:

Length of the suspension member (vertical height from seat to pivot point) ÷ 2 + height of swing seat at rest.

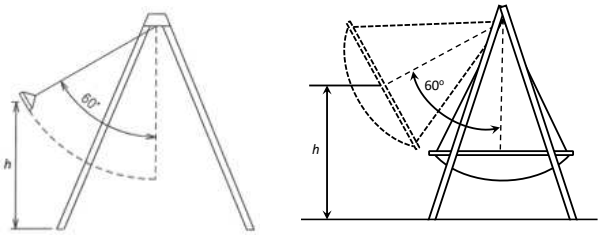

Slides

The FHoF of the slide corresponds to the actual seating surface of the slide at any given point.

The surface around the run-out section of the slide shall have a critical fall height of at least 1000 mm.

Carousels

(a) Standard Carousels – The impact area around carousels shall have a critical fall height of at least 1000 mm.
(b) Inclined Discs – The impact area shall have a critical fall height of at least 1000 mm.
(c) Bowl-like Carousels – The impact area shall have a critical fall height of at least 1000 mm.
(d) Spinning Poles (< 500mm diameter) – FHoF is measured as the platform height to the ground below but is always deemed at least 600mm.
(e) Overhead Carousels – FHoF is measured as the grip/seat height (if the grips are flexible, angled at 30°) minus 1500mm, but the critical fall height of the surface must be at least 1000mm.

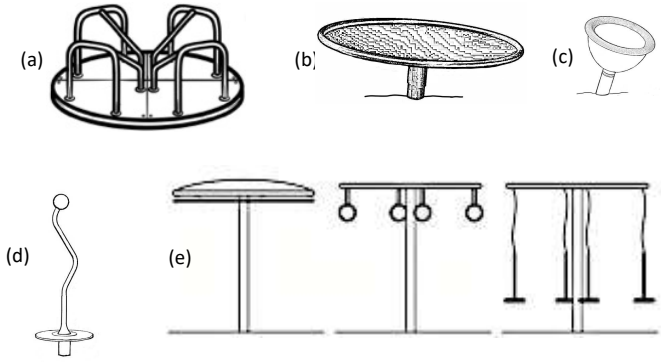

Rocking Equipment

FHoF is measured from the centre of the seat in its most extreme position to the ground below.

The impact area shall have a critical fall height of at least 600mm, where the actual height is less than 600mm.

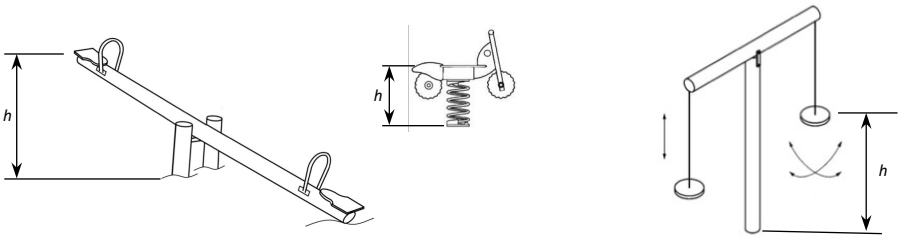

Flying Foxes

FHoF is measured from the seat (unloaded) to the surface below or from the grip position (unloaded) minus 1.5 m to the surface below.

Note: The minimum ground clearance below the seat when loaded with 68.5 kg is 350mm.

The surface below a flying fox shall have a critical fall height of at least 1000 mm.

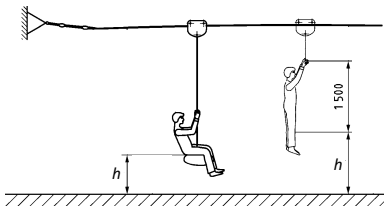

Activity Nets (with a cellular network structure)

FHoF is measured from the highest foot position giving an unimpeded fall to the surface below. (Falls from higher portions of the net will be broken by the net structure below when the net structure is within the falling space of such points.)

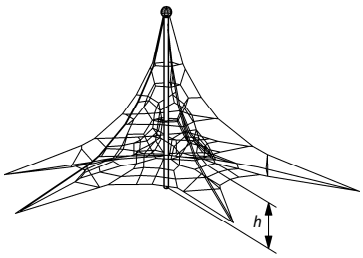

Bouncing Facilities (Bouncing Mats)

FHoF is measured from the suspension bed to the lowest point of the falling space plus 900mm.

Note: Typically, bouncing facilities do not act as trampolines as they do not allow for high jumps or encourage acrobatic jumps, which are more likely to lead to serious injuries.

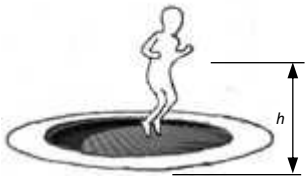

Figure 2 – Specific means of determining FHoF

Table 2 – Maximum allowable free height of fall (FHoF) limits

Equipment type	Type of use	Measured from	Maximum allowable FHoF
Equipment easily accessible to all ages	Standing	Foot support to surface below	3m
	Sitting	Seat to surface below	3m
	Hanging	Hand support to surface below	3m
	Climbing (when access to the top of the item is provided)	Highest climbable point to the surface below	3m
	Climbing (with sufficient distance to deter climbing to the top)	Maximum hand support minus 1m to the surface below	3m (max hand support 4m)
	Steep play elements	Platform to the surface below	2m
Equipment not easily accessible	Standing	Foot support to surface below	3m
	Sitting	Seat to surface below	3m
	Hanging	Hand support to surface below	3m
	Climbing (when access to the top of the item is provided)	Highest climbable point to the surface below	3m
	Climbing (with sufficient distance to deter climbing to the top)	Maximum hand support minus 1m to the surface below	3m (max hand support 4m)
	Steep play elements	Platform to the surface below	3m
Supervised early childhood services (SECS)	Standing	Foot support to surface below	1.8m
	Sitting	Seat to surface below	1.8m
	Hanging	Hand support to surface below	1.8m
	Climbing (when access to the top of the item is provided)	Highest climbable point to the surface below	1.8m
	Climbing (with sufficient distance to deter climbing to the top)	Maximum hand support minus 1m to the surface below	1.8m (max hand support 2.8m)
Swings	Sitting	Middle of seat to surface below when raised at 60° to vertical	3.0m
Cableways	Sitting	Seat to surface below (unloaded)	2.0m
	Hanging	Grip position minus 1.5m to surface below (unloaded)	1.5m
Carousels (except overhead hanging types)	Standing / Sitting	Foot support / seat to surface below	1.0m
Carousels (overhead hanging types)	Hanging	Grip position minus 1.5m or seat height to surface below	1.5m
Axial See-Saws	Sitting	Seat to surface below (at extreme positions)	1.5m
Single Point See-Saw & Rockers	Sitting	Seat to surface below (at extreme positions)	1.0m
Multi Point See-Saw & Rockers	Sitting	Seat to surface below (at extreme positions)	1.0m
Rocking See-Saws	Sitting	Seat to surface below (at extreme positions)	1.0m
Sweeping See-Saws (multi-directional)	Sitting	Seat to surface below (at extreme positions)	2.0m
Overhead Single Axis See Saws	Sitting	Seat to surface below (at extreme positions)	2.0m
Spatial Networks	Climbing	Point from which there is no unimpeded fall to surface below	3.0m
Bouncing Facilities (Bouncing Mats)	Bouncing	From the suspension bed to the lowest point of the falling space + 900mm	N/A

Surfacing requirements

The 'critical fall height' (CFH) of a surface is the maximum free height of fall for which a surface will provide an acceptable level of impact attenuation. The required CFH for a surface will generally equal at least the free height of fall of the equipment, but may be greater in the case of equipment causing a 'forced movement' of the body. In these cases, the surface may have a CFH that exceeds the actual fall height of the equipment (as detailed in Figure 2 in the previous section.

Note: Forced movement is defined as movement of the user caused by the equipment (e.g. swinging, sliding, carousel rotation etc.) which, once started, cannot be totally controlled by the user.

When conducting on-site impact testing, the 'measured fall height' of the equipment (which is calculated as the 'free height of fall' plus an additional 10% allowance) can be used to reduce the number of drop-tests required.

Fall heights below 600 mm

There is no impact attenuating surface requirement for equipment with a 'free height of fall' of less than 600mm unless forced movement exists (see below).

Fall heights above 600 mm and below 600 mm where forced movement exists

For equipment with a free height of fall above 600 mm, or where forced movement exists, the surfacing requirements shall meet the requirements of AS 4422:2016 (Playground surfacing – specifications, requirements and test method), for the respective heights.

The minimum 'critical fall heights' for various types of forced movement equipment where the actual equipment height is less than the required 'free height of fall' are detailed in Figure 2. In instances where the actual 'free height of fall' of a particular item of equipment exceeds these minimum critical fall heights for that type of equipment, the critical fall height shall be at least that required for the actual 'free height of fall'.

Note: Adjacent platforms are permitted to have a free height of fall of up to 1m without impact attenuation on the lower platform. Above this height the surface of the lower platform shall present the necessary impact attenuating properties.

Impact area, falling space and free space

The requirements for falling space, free space and the impact area around the playground equipment are intended to offer some protection to users during the initial impact of a potential fall.

The 'impact area' (often referred to as fall-zone) deals with the surfaces that can be hit as a result of a fall. The 'falling space' and 'free space' are 3-dimensional spaces around the equipment. 'Free space' specifically relates to the space around a user undergoing 'forced movement'.

Specific requirements relating to the minimum space around playground equipment are detailed in the following sections.

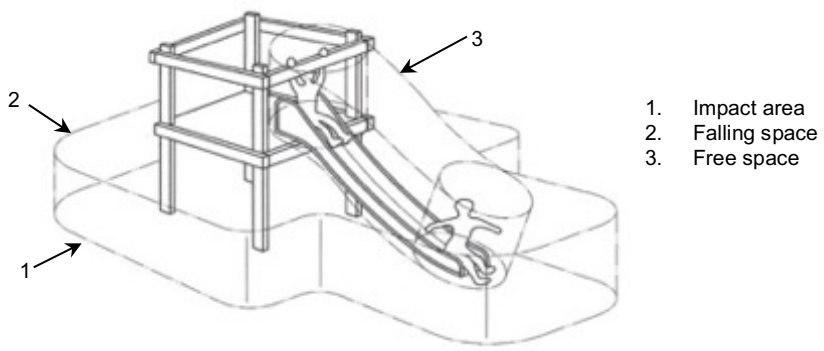

Figure 3 – Example of falling space and impact area

Impact area (often referred to as 'fall zone')

The impact area is the area that can be hit by a user falling from the playground equipment. The general dimensions of the impact area are shown in Figure 4 and Table 3.

Table 4 details specific requirements relating equipment where the extent of the impact area is increased as a result of forced movement. The impact area may also be decreased in certain cases, such as when the equipment is fully enclosed or installed on or against a wall.

Generally, the impact areas of different equipment may overlap, however in the case of equipment where forced movement exists there are restrictions to overlapping, as detailed in Table 4 and under the following headings 'falling space' and 'free space'.

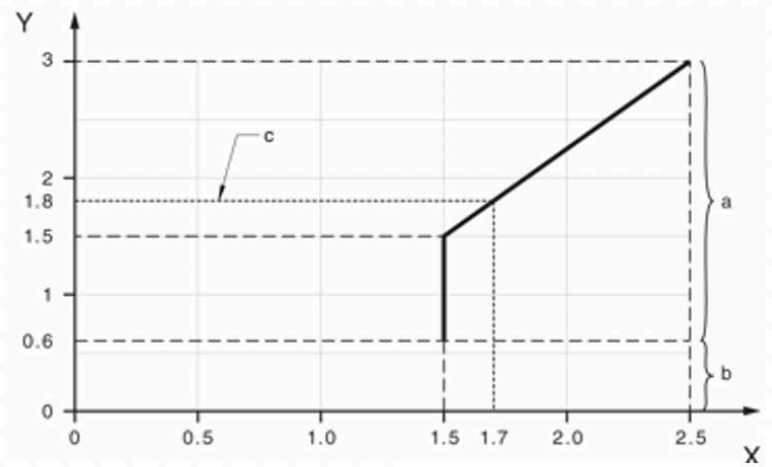

Y free height of fall (FHoF)
X minimum dimension of impact area
a impact attenuating surface required
b no impact attenuating surface required unless forced movement
c maximum FHoF and fall zone for SECS

If $0.6 \leq Y \leq 1.5$m, then X = 1.5m

If $Y > 1.5$m, then $X = {}^{2}/_{3}Y + 0.5$m

Figure 4 – Extent of the impact area

Table 3 – Extent of the impact area (general requirements)

FHoF	Extent of impact area	Surfacing requirements
No forced movement < 0.6m	≤ 1500 mm *	Surface with no requirements
Forced movement < 0.6m	See Table 4 for specific requirements for items involving forced movement.	Impact attenuating surfacing tested in accordance with AS 4422:2016
0.6m ≤ *h* ≤ 1.5m	1500 mm	
1.6m	1567 mm	
1.7m	1633 mm	
1.8m	1700 mm	
1.9m	1767 mm	
2.0m	1833 mm	
2.1m	1900 mm	
2.2m	1967 mm	
2.3m	2033 mm	
2.4m	2100 mm	
2.5m	2167 mm	
2.6m	2233 mm	
2.7m	2300 mm	
2.8m	2367 mm	
2.9m	2433 mm	
3.0m	2500 mm	

* Note: While the Standard shows non-moving equipment with a FHoF of less than 600 mm as having a impact area and indicates that this can be reduced below 1500 mm in some instances to allow for play elements such as stepping stones, the surface in this area has no impact attenuation requirement.

Table 4 – Extent of the impact area (specific requirements based on movement)

Equipment Type	Extent of impact area	Diagrams
Swings	LENGTH The minimum length of the impact area (*L*) is equal to *A* + *B* or *A* + *C*, where: A = the horizontal distance when the seat has travelled through an arc of 60°, which can be calculated as the length of the suspension member (*h*) x 0.867. B = 1750 mm, where the surface is level with the surrounding surface (normally synthetic), or in all cases in SECS settings. In this instance there should be an additional area extending 500m that is free from obstacles. C = 2250 mm, where the surface is contained (normally loose fill). WIDTH The minimum width of the impact area (*W*) below each swing seat with a width of less than 500 mm shall be 1750 mm. If the seat is wider than 500 mm the width of the impact area shall increase by the difference between the actual width and 500 mm. *Note: The falling space and free space of adjacent seats on the same frame may overlap, provided correct spacing is achieved.* In the case of single point swings (which allow movement through more than one axis or plane) the extent of the impact area shall be circular with a radius calculated above as *L*. *Note: The impact area of a swing cannot overlap the impact area of another item of equipment.*	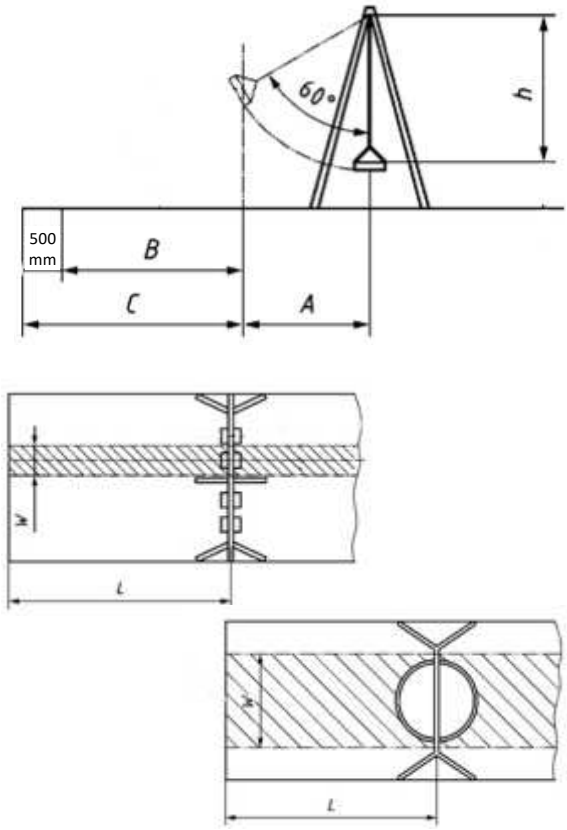
Slides	TO THE SIDES The impact area to the sides of the slide shall correspond to the general FHoF requirements for the height of the slide at various points where the height of the sliding surface is 600 mm or above. Where the sliding surface is below 600 mm the impact area shall extend at least 1000 mm to the sides of the run-out section. FROM THE END The impact area beyond the run-out section is dependent on the type of slide as follows: <u>Type 1</u>: (most slides fall into this category) Impact area to extend: - 2000 mm beyond the run-out section if the sliding section is greater than 1500 mm, or - 1500 mm if the sliding section is less than 1500 mm. The last metre shall have a 1000 mm radius in line with the outside edge of the slide. <u>Type 2</u>: (generally very long slides) Impact area to extend 1000 mm beyond the run-out section. This is applicable only where the length of the run-out section of the slide is at least 0.3 x the length of the sliding section. *Note: The free space around a slide (see 'free space' in the following section) cannot overlap the impact area of another item of equipment.*	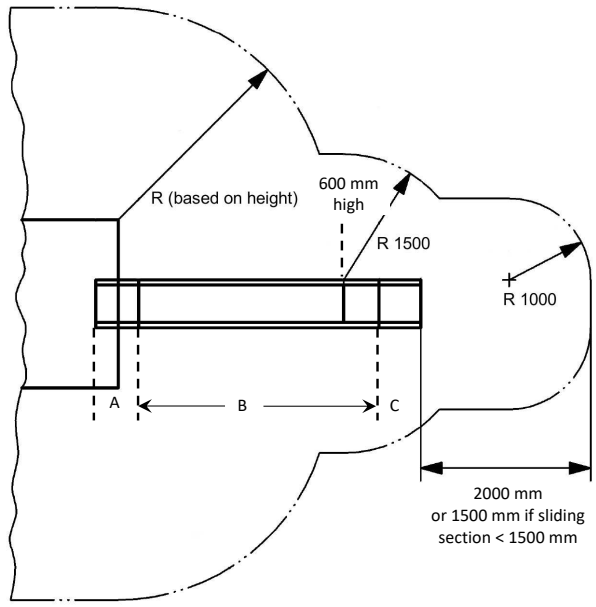 *A* starting section *B* sliding section *C* run-out section *R* radius of impact area

Equipment Type	Extent of impact area	Diagrams
Carousels	SPINNING POLES (diameter < 500 mm) & BOWL-LIKE CAROUSELS The impact area shall extend at least 1500 mm from the outside of the standing platform/bowl. *Note: Overlapping of the impact area of spinning poles with a diameter of less than 500mm and single-user bowl-like carousels with the impact area of other items of equipment is permitted. These items are not deemed to have free space. Bowl-like carousels for more than one user are considered to have free space, which extends 1000mm from the perimeter and cannot overlap the impact area of another item of equipment.* STANDARD CAROUSELS, ROTATING NETS & REVOLVING RINGS The impact area shall extend at least 2000 mm from the outside of the carousel. *Note: The impact area of these types of carousel cannot overlap the impact area of another item of equipment.* INCLINED DISC *(on an inclined axis with no clearly definable user stations)* The impact area shall extend at least 3000 mm from the outside of the carousel. *Note: The impact area of this type of carousel cannot overlap the impact area of another item of equipment.* OVERHEAD CAROUSELS The impact area shall extend at least 2000 mm from the outside of the carousel. In the case of carousels with flexible grips/seats, the impact area is measured from the grips/seats when they are angled out by 30°. In addition, the area extending 1000 mm beyond the impact area shall be free of obstacles. *Note: The impact area of these types of carousel cannot overlap the impact area of another item of equipment.*	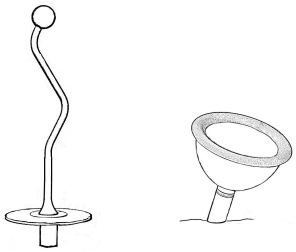 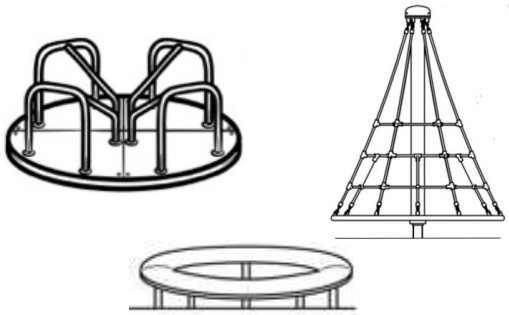 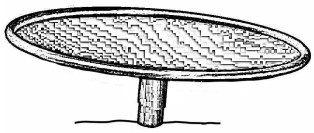 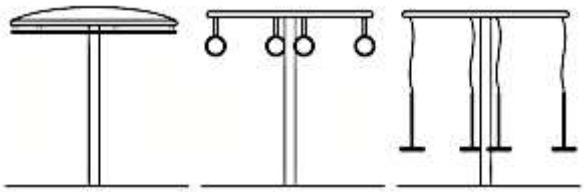
Rocking Equipment	STANDARD ROCKING EQUIPMENT The impact area shall extend at least 1000 mm beyond the perimeter of the equipment when in its most extreme position. If the seat height exceeds 600 mm (such as in the case of see saws), the extent of the impact area shall be at least 1500 mm. If the equipment is intended to be used in a standing position the impact area shall be at least 1500 mm. *Note: Standard rocking equipment relying on springs or other damping means are not considered to have forced movement, so overlapping of the impact area is permitted. This does not apply to axial see saws.*	 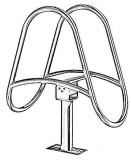 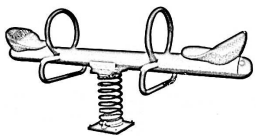 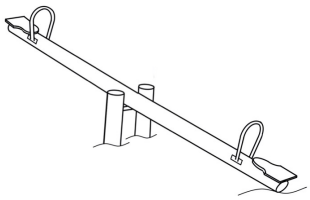

Equipment Type	Extent of impact area	Diagrams
Rocking Equipment (cont'd)	SWEEPING SEESAW *(in which both vertical and horizontal movement takes place, which may result in a sweeping motion.)* The general requirements for the extent of the impact area apply based on the height of the user stations when in their extreme position. The general requirements then apply for that height (see Table 3). *Note: The free space (see 'free space' on the following page) cannot overlap the impact area of another item of equipment.* OVERHEAD SINGLE AXIS SEESAW *(with a single overhead rocking axis, where the user stations are flexibly suspended below and provide and additional limited singing motion.)* The general requirements for the extent of the impact area apply based on the height of the user stations when angled at 20° from the vertical (see Table 3). *Note: The free space (see 'free space' on the following page) cannot overlap the impact area of another item of equipment.*	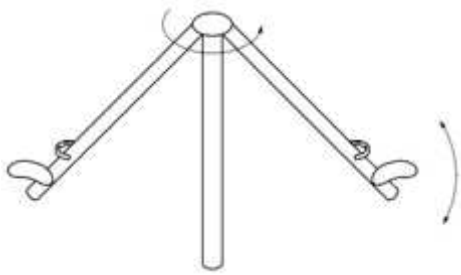 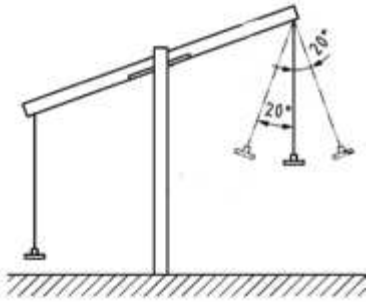
Cableways	TO THE SIDES The impact area shall extend at least 2000 mm to each side of the cableway. FROM THE ENDS The impact area shall extend at least 2000 mm beyond the end of the handgrip or seat when swinging at an angle of 45° from the compressed end stop, with the width reducing to an overall width of 2000 mm. *Note: The free space (see 'free space' on the following page) cannot overlap the impact area of another item of equipment.*	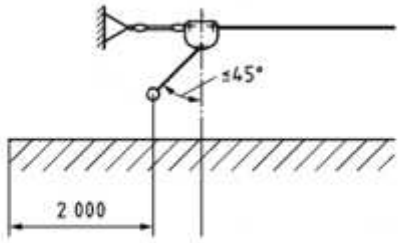 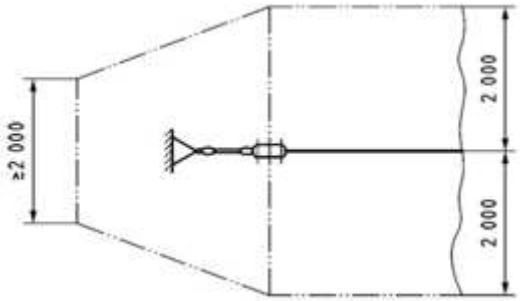
Bouncing Facilities (Bouncing Mats)	The impact area of a small bouncing facility (with a suspension bed of less than 1.44m^2) shall extend at least 1500 mm. The impact area of a large bouncing facility (with a suspension bed greater than 1.44m^2) shall extend at least 2000 mm. *Note: The free space (see 'free space' on the following page) cannot overlap the impact area of another item of equipment.*	

Falling space

Falling Space is the space in or around the equipment that can be passed through by a user falling from an elevated part of the equipment.

The falling space is a 3-dimensional area, commencing at the free height of fall and extending over the same horizontal dimensions that apply to the extent of the impact area (as indicated in Figures 4 & 5 and Tables 2 & 3) then extending vertically to the impact area below.

In most cases the falling spaces of different items of equipment may overlap, except in the case of equipment involving 'forced movement' where overlapping should not occur.

The falling space shall not contain any obstacles (e.g. hard or sharp objects or tree branches) that a user could hit, causing injury, during a fall from an elevated position. Examples of such hazards include exposed foundations and posts not flush with adjacent parts.

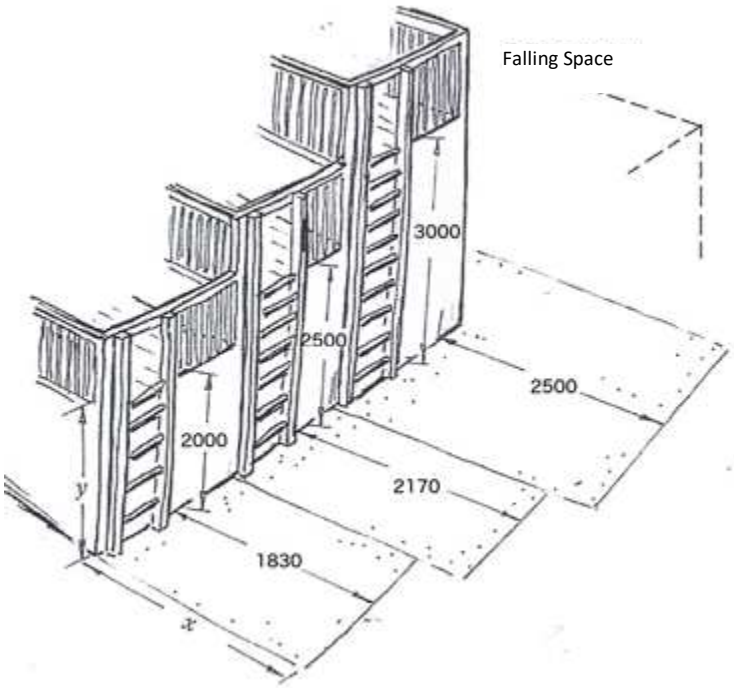

Figure 5 – Extent of the falling space

The intention of this requirement is not to protect the user from minor knocks or bumps, that might lead to a bruise or strain, etc., as these types of injuries are possible in all situations.

The following items are permitted within the falling space:

- Adjacent parts of play structures (or other items) with a difference in free height of fall of less than 600 mm;
- Parts of the equipment bearing or containing the user, or helping the user maintain balance (e.g. a platform adjacent to a fireman's pole, or a rung below a monkey bar);
- Parts of the equipment with an inclination of 60° or more from the horizontal. (In this case a falling user would only make a glancing contact with the equipment part.)

Free space

Free space is the space immediately around a user undergoing forced movement. Forced movement is defined as movement of the user caused by the equipment (e.g. swinging, sliding, carousel rotation, bouncing etc.) which, once started, cannot be totally controlled by the user. It applies to slides, fireman's poles, cableways (flying foxes), swings, carousels, spring rockers and bouncing facilities.

Free space is represented as a series of cylindrical spaces (see Figures 6 & 7) originating from and perpendicular to the surface bearing the user and along the path of movement. It does not include the three-dimensional area in which the falling movement takes place.

There shall be no overlapping of adjacent free spaces, or of free space and falling space. This requirement does not apply to the common space between pieces of equipment in a cluster (a cluster is defined as two or more pieces of equipment designed to be installed in close proximity to each other to provide continuity in a sequence that is needed for the play activity). The free space of multi-track slides may also overlap.

Parts of the equipment bearing or containing the user, or helping the user to keep balance (e.g. a platform providing access to a fireman's pole, and the supporting posts on a spiral slide) are permitted within the free space.

The free space of an item shall not contain any obstacles (e.g. other items of equipment or tree branches) that interfere with the passage of or are in the path of the user whilst undergoing forced movement, nor should it be intersected by main travelling routes through the playground, such as a pathway. Consideration should be given to the placement of surrounding items that may encourage a child to intersect the free space by running from one activity to another via the most direct route.

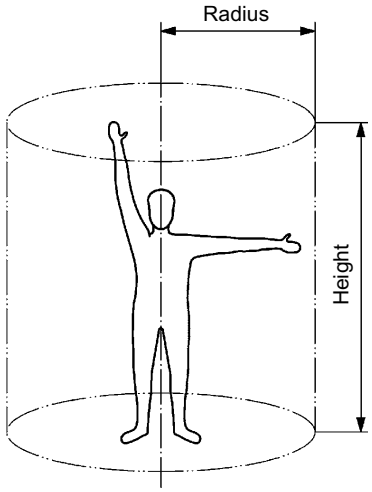

Figure 6 – Cylindrical space representing free space

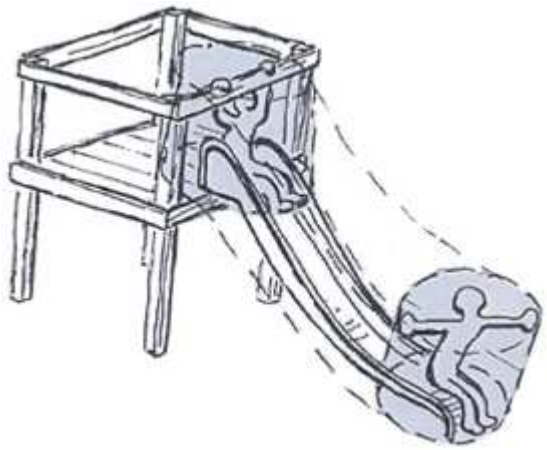

Figure 7 – Example of free space on a slide

Table 5 – Dimensions of the cylinder for the determination of free space

Type of use	Radius	Height
Standing	1000 mm	1800 mm
Sitting	1000 mm	1500 mm
Hanging	500 mm	300 mm above and 1800 mm below the hanging grip position
Carousels (additional requirements due to centrifugal force.)	2000 mm to the side of the carousel and 3000 mm in the case of giant revolving disks	At least 2000 mm above the carousel

Protection against falling

When determining the level of protection against falling required for various items of playground equipment it is necessary to ascertain the intended type of use of the equipment (see 'categories of playground equipment' on page 6). The level of protection required will vary between equipment that is easily accessible to all ages and equipment deemed not easily accessible.

Types of protection

Protection against falling can be provided in the form of handrails, guardrails and barriers. Figures 8 & 9 and Table 6 provide detail of the requirements for protection for each category of equipment at various heights.

Handrails

A handrail is defined as a rail intended to assist the user to keep balance. The height requirement for handrails is set out in Table 6. The use of more than one handrail is permissible provided they do not create any openings that may result in entrapment (as defined under "Protection against entrapment"). The cross section of any handrail must not exceed 60 mm in width (grasp).

Handrails/guardrails may be used on stairs and ramps leading to platforms up to 1m in height. Above this height barriers are required. Climbing items at heights above 1m are still permitted to have handrails. When installed on ramps or stairs, handrails, guardrails or barriers shall commence at the lowest position on the ramp or stairs.

Guardrails

A guardrail is defined as a rail intended to prevent the user from falling from the equipment. When used on a platform, guardrails shall be at a height of between 600 mm and 850 mm above the standing surface and shall completely surround the platform, except for entry and exit openings necessary for other items of play equipment. The width of these entry or exit points shall have a maximum clear opening of 500 mm, except in the case of stairs, ramps and bridges, where the width of the opening shall be no greater than the width of the adjoining element.

Slides greater than 1000 mm in height require a guardrail above the starting section of the slide, positioned between 600 mm and 900 mm above the slide surface (towards the upper end of this limit is generally more functional).

Note: Where guardrails are specified this is a minimum requirement and does not preclude the use of barriers.

Barriers

A barrier is defined as a device intended to prevent the user from falling from the equipment and from passing beneath. Barriers are used on platforms, stairs, ramps or rigid bridges.

The construction of the barrier should be such that there are no horizontal or near horizontal rails or bars or any infilling, that can be used as steps by children attempting to climb. The design of the top of the barrier should not encourage children to stand or sit on them. Openings in the barriers should not create any form of entrapment.

On equipment that is 'easily accessible' to younger children, any platform (defined as a surface where users can stand without the need of hand support) above 600 mm in height should have a barrier at least 700 mm high to prevent falls. (While 700 mm is the minimum according to the Standard, barriers are typically higher than this in practice.)

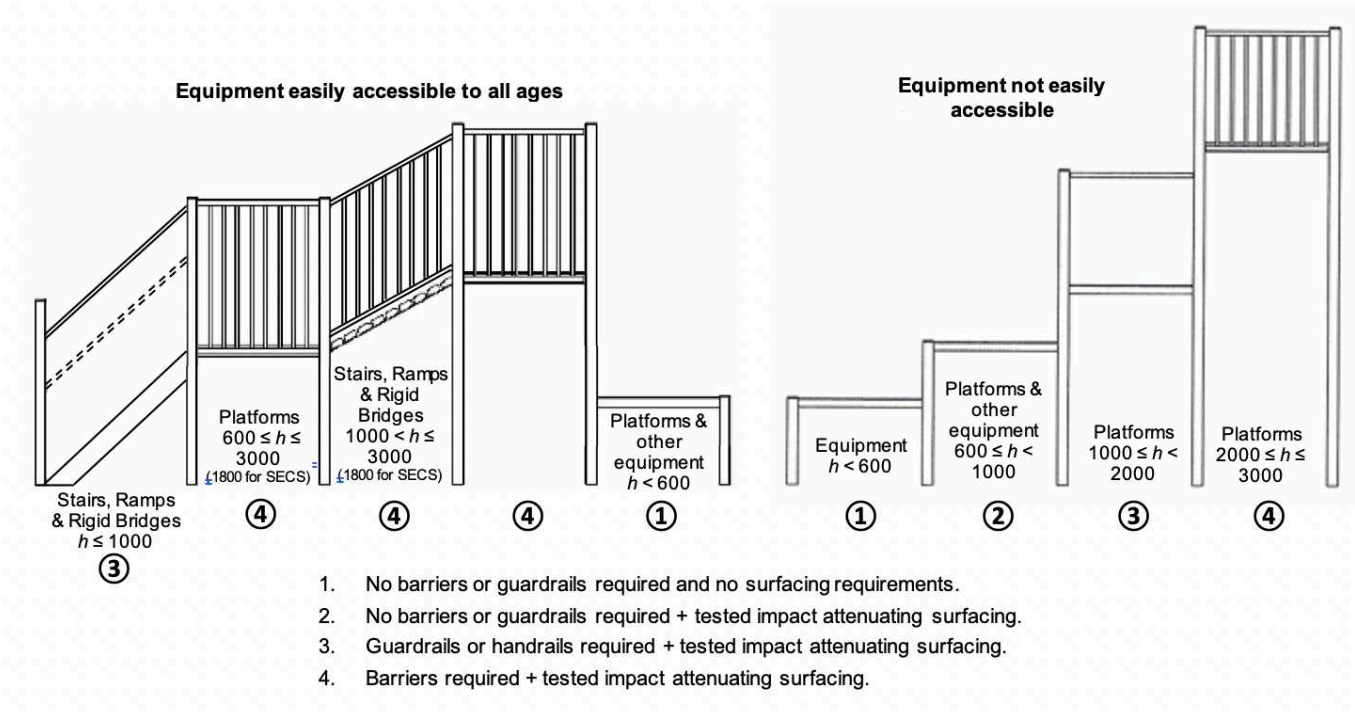

Figure 8 – Protection against falling

Openings in barriers

Clear openings in the barriers at access/egress points should not be greater than 500 mm in width unless a guardrail spans the top of the opening, in which case the opening may be wider (see figure 9).

- In the case of equipment deemed 'easily accessible', 'steep play elements' cannot have an opening exceeding 500 mm in width, even with a guardrail.
- For equipment deemed 'not easily accessible', the opening above 'steep play elements' can be a maximum of 1200 mm provided a guardrail is placed above the opening.

Steep play elements leading to platforms with a fall height greater than 1000 mm shall have hand supports/handgrips to aid in transition onto the platform (see figure 10).

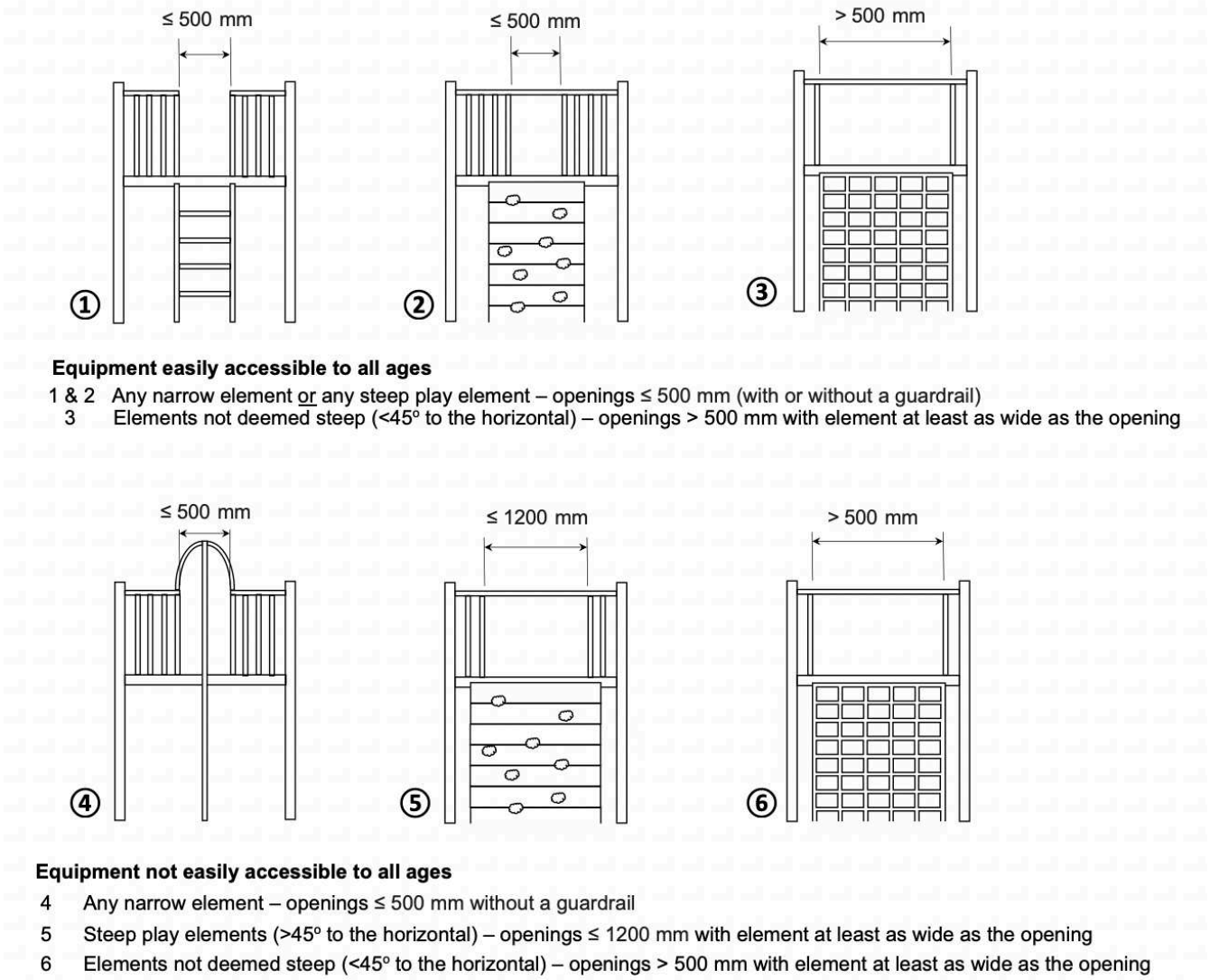

Figure 9 – Entry/exit openings in Barriers

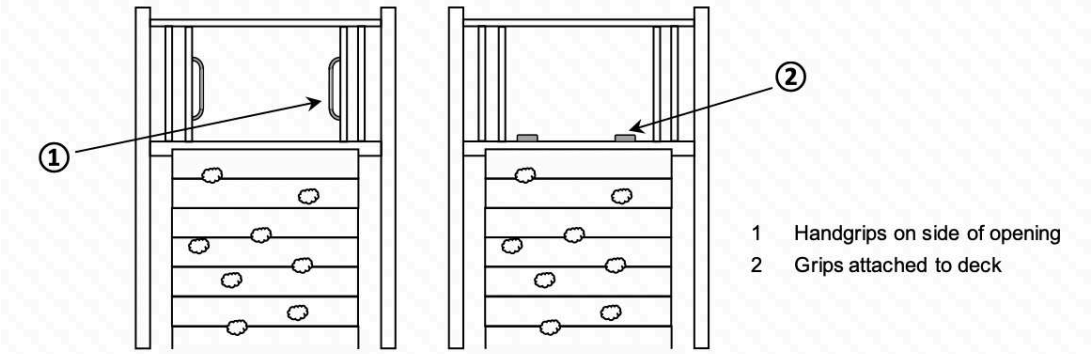

Figure 10 – Examples of hand support/grip for steep play elements

Grip & Grasp

Items intended for grip (when support of full body weight is required) shall have a cross-section of between 16 mm and 45 mm when measured in any direction.

Items intended for grasp shall have a cross-section with a maximum width of 60 mm.

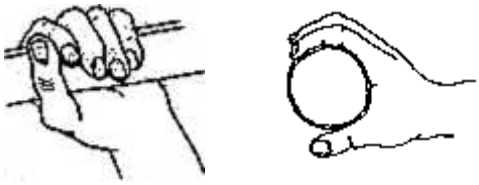

Grip Grasp

Figure 11 – Grip & Grasp

Table 6 – Requirements for Protection

Setting	Type of equipment	Equipment Height (*h*)	Minimum Protection Requirements	Impact Attenuating Surfacing
Equipment easily accessible to all ages	Platforms	*h* < 600 mm	No barriers or guardrails required.	Not required
		600 mm ≤ *h* ≤ 3000 mm (Steep play elements have a maximum height of 2000 mm)	Barrier (minimum height above standing surface 700 mm). Maximum openings of 500 mm without a guardrail. Steep play elements have a maximum opening of 500 mm, even with a guardrail. For elements that are not steep the opening can be as wide as the element with a guardrail across the opening.	Required
	Stairs, Ramps & Rigid Bridges	*h* ≤ 1000 mm	Handrail(s) / guardrail(s) between 600 mm and 900 mm above standing surface.	Required
		1000 mm < *h* ≤ 3000 mm	Barrier (minimum height above standing surface 700 mm).	Required
Equipment not easily accessible	Platforms	*h* < 600 mm	No barriers or guardrails required.	Not required
		600 mm ≤ *h* < 1000 mm	No barriers or guardrails required.	Required
		1000 mm ≤ *h* < 2000 mm	Guardrail (between 650 mm and 850 mm above standing surface).	Required
		2000 mm ≤ *h* ≤ 3000 mm	Barrier (minimum height above standing surface 700mm). Maximum openings of 500 mm without a guardrail. Steep play elements have a maximum opening of 1200 mm with a guardrail. For elements that are not steep the opening can be as wide as the element with a guardrail across the opening.	Required
Supervised early childhood services (SECS)	Platforms	*h* < 600 mm	No barriers or guardrails required.	Not required
		600 mm ≤ *h* ≤ 1800 mm	Barrier (minimum height above standing surface 700 mm). Maximum openings of 500mm without a guardrail. Steep play elements have a maximum opening of 500 mm, even with a guardrail. For elements that are not steep the opening can be as wide as the element with a guardrail across the opening.	Required
	Stairs, Ramps & Rigid Bridges	*h* ≤ 1000 mm	When only a single handrail is used – between 450 mm and 700 mm above standing surface. When 2 handrails are used – between 450mm and 900mm above stranding surface.	Required
		1000 mm < *h* ≤ 1800 mm	Barrier (minimum height above standing surface 700 mm).	Required

Protection against entrapment

Entrapment is defined as a hazard presented by the situation in which a body, or part of a body, or the clothing can become trapped. The standard only considers certain types of entrapment where the user is not able to free him/herself and injury is caused by the entrapment.

The various types of entrapment and their testing procedures are detailed in the following pages.

Head & neck entrapment – completely bound openings

These are openings though which a user can slide or squeeze, usually feet first, or insert their head; and which will not allow the passage of the head in its most unfavorable position (see Figure 12).

Bound openings, either vertical or horizontal, (e.g. in barriers, flexible nets, log climbing frames, etc.) need to meet the following size requirements. If the lower edge of the opening is greater than 600 mm above ground level, any openings that allow the passage of the small torso probe (89 mm x 157 mm) or the small head probe (130 mm diameter), but do not allow passage of the large head probe (230 mm in diameter) are unacceptable. In brief, avoid any bound openings between 89 mm and 230 mm in any one direction.

Figure 12 – Example of a bound opening that may cause head or neck entrapment

<u>Test procedure</u>

Apply each of the probes illustrated in Figure 13, with the axis of the probe perpendicular to the plane of the opening.

If the probes are not freely passing through the opening apply a force of 222(±5)N to the probe.

> *NOTE: The large head probe dimensions are based on those for an older child and, therefore, there will be a large tolerance if assessing for use by a young child.*

Any openings that allow the passage of the Torso Probe or the Small Head Probe, but do not allow the passage of the Large Head Probe fail the test and are unacceptable.

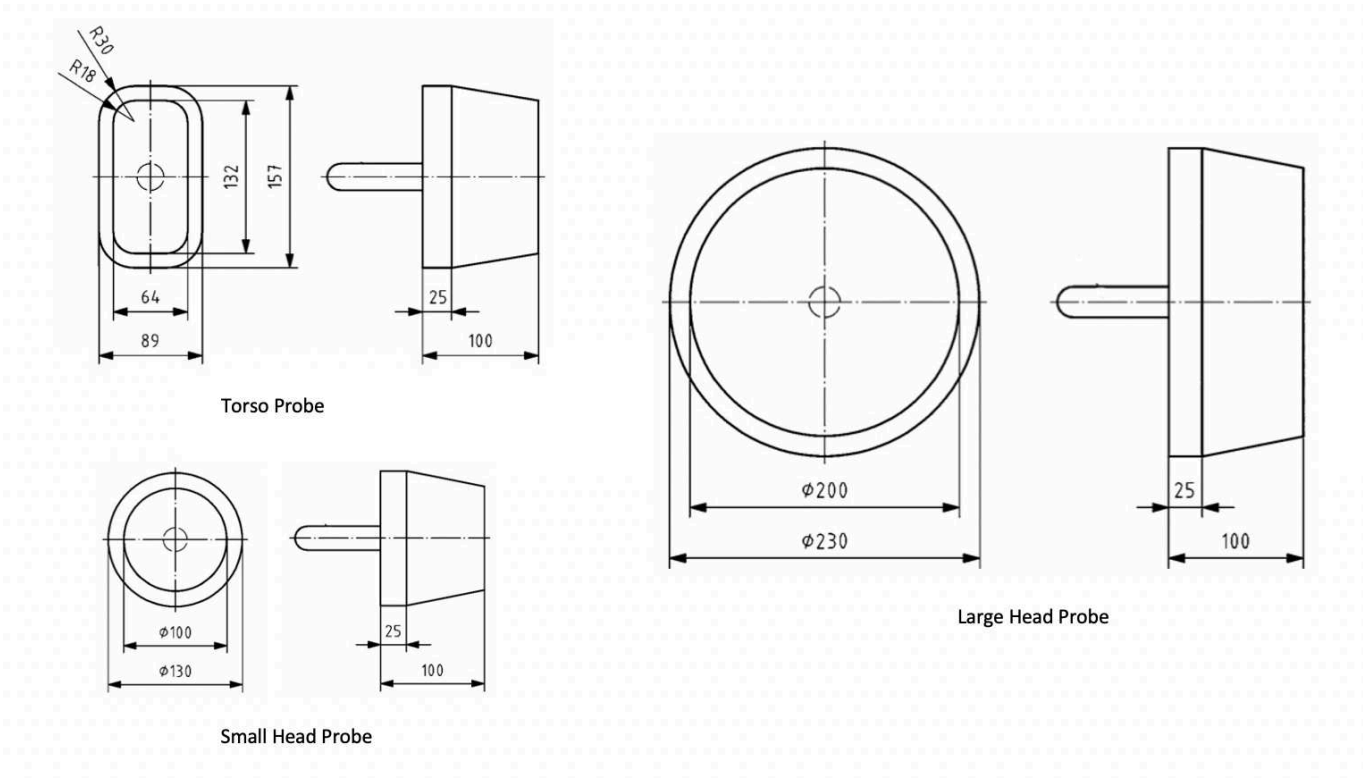

Figure 13 – Probes for determination of head and neck entrapment in completely bound openings

Head & neck entrapment – partially bound and V-shaped openings

These are openings into which a user can insert their neck and will potentially prevent the head from easily rotating out, causing strangulation.

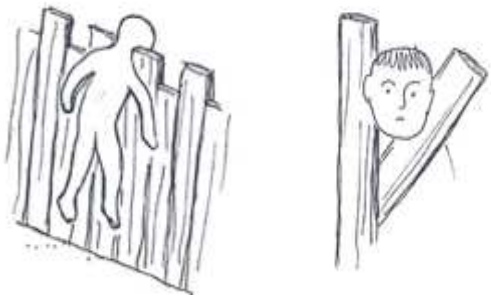

Figure 14 – Examples of partially bound or V-shaped openings which may cause head or neck entrapment

Partially bound openings (e.g. gaps between the tops of adjacent vertical boards on barriers) that are more than 600 mm above the ground and greater than 45 mm in depth should comply with one of the following:

- the width of the opening should be less than 45 mm (to prevent possible insertion of the neck), or
- the width of the opening should be greater than 155 mm if the depth of the opening is less than 265 mm on both sides, or
- the width of the opening should be greater than 230 mm if the depth of the opening is greater than 265 mm.

Note: Figure 15 provides partially bound opening requirements. Figure 20 provides some examples of acceptable partially bound openings.

V-shaped openings that converge in a downward direction and are greater than 600 mm above the ground should not be of an angle less than 60°, unless the depth of the opening is less than 45 mm.

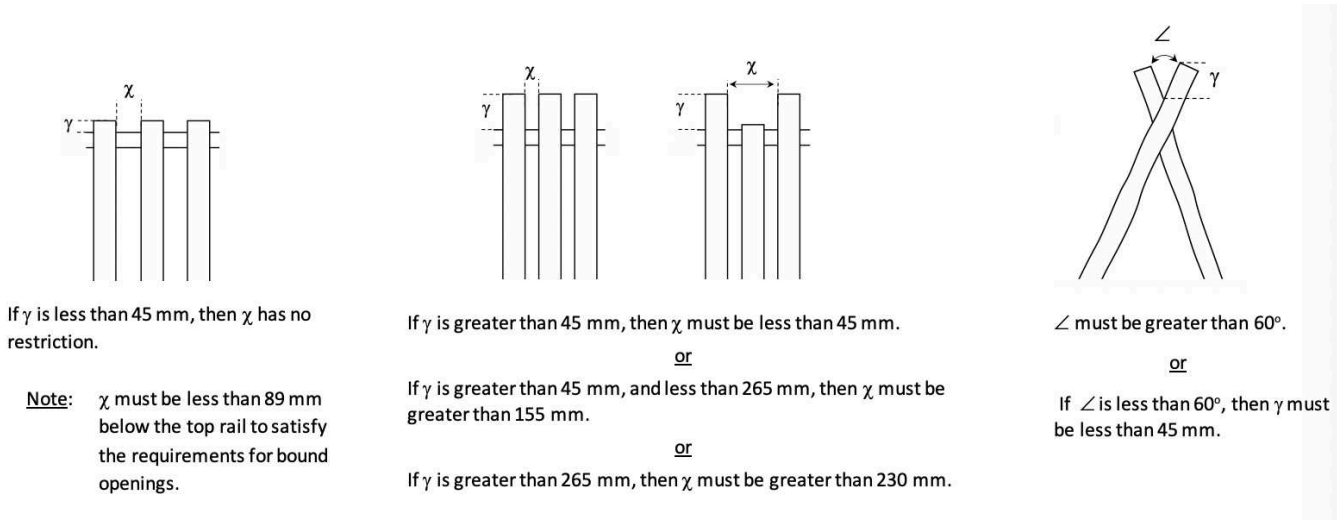

Figure 15 – Examples of partially bound opening requirements

Test procedure

Firstly, determine whether an opening is deemed to be accessible or not by applying the 'B' portion of the probe (representing the neck) between and perpendicular to the boundaries of the opening. If the probe can be inserted to its full thickness (45 mm) it is deemed to be accessible and further testing is required to determine whether it poses a hazard. If the probe cannot be inserted to its full thickness the opening is deemed not accessible and no further testing is required. (See Figure 17.)

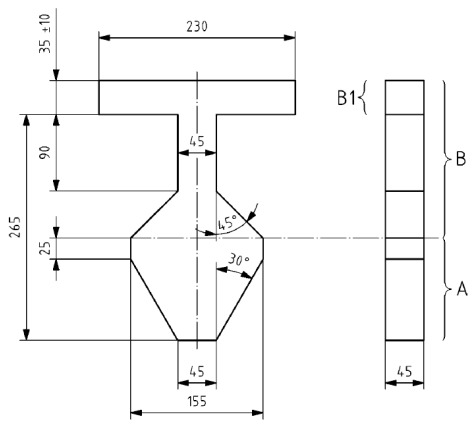

Figure 16 – Probe for assessment of head and neck entrapment in partially bound and V-shaped openings

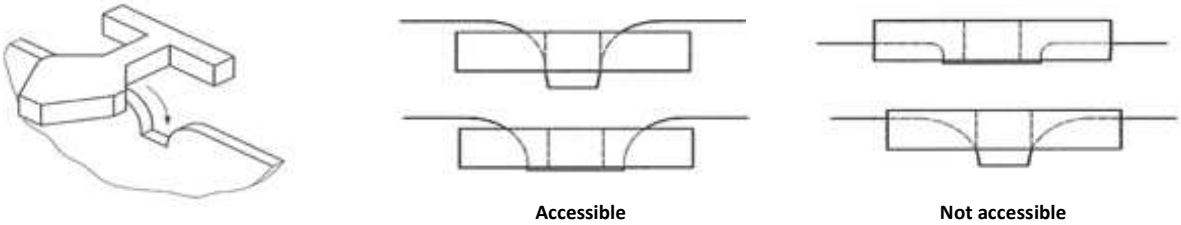

Figure 17 – Method for determining the accessibility of a partially bound or V-shaped opening

If the opening is accessible, test further using portions 'A' and 'B1' of the probe (representing the head and shoulders).

The testing procedure for accessible openings varies slightly depending on the angle of the opening. To determine the testing range of the opening, insert the 'A' portion of the probe into the opening. The angle of its centre line determines the range (see Figure 18). Testing procedures for both ranges are shown in Figure 19.

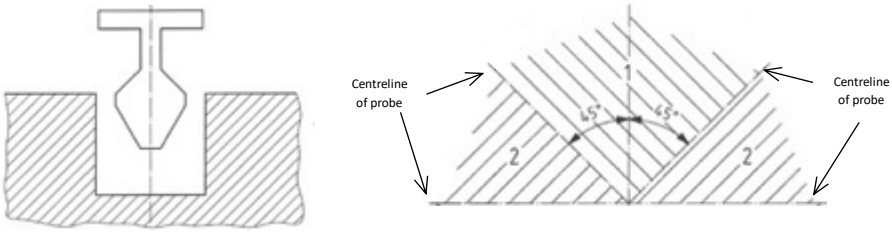

Figure 18 – Determining angle range for partially bound openings

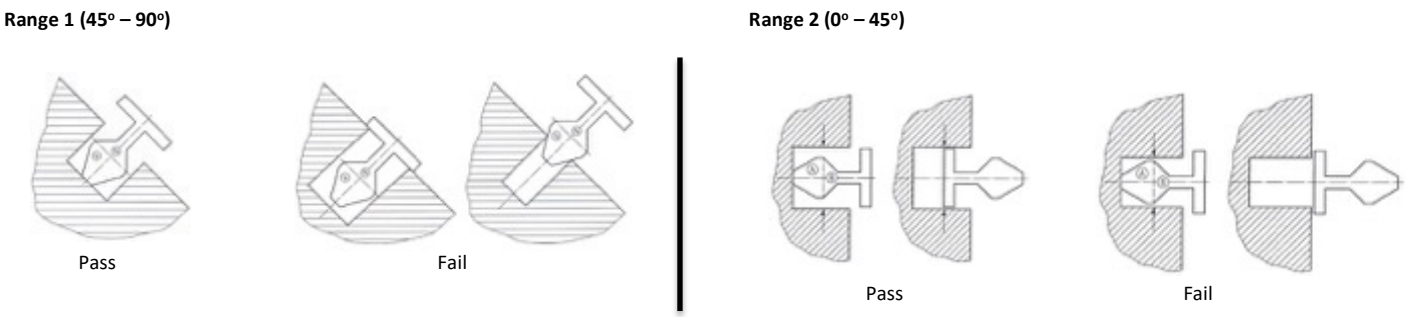

Figure 19 –Test method for partially bound and V-shaped openings

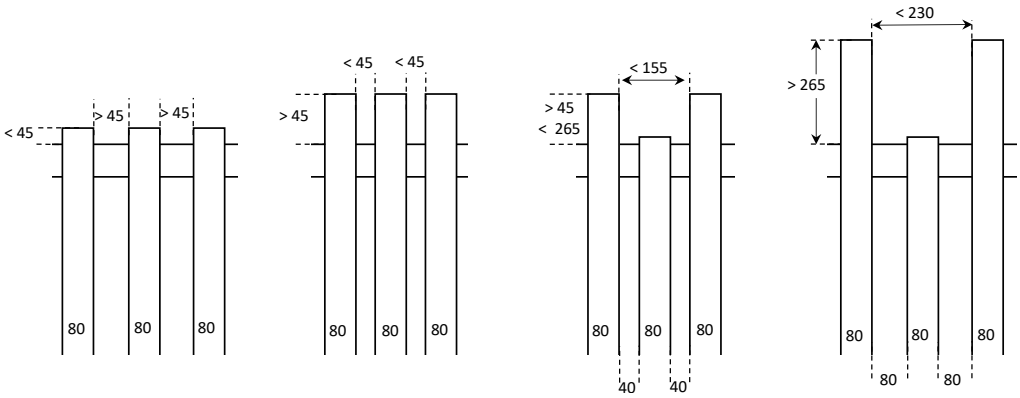

Figure 20 – Examples of acceptable partially bound opening configurations

Head & neck entrapment - non-rigid or flexible openings

Non-rigid members, such as ropes or chains, may create a hazard if they can overlap and if, by doing so, they create openings that do not conform to the requirements for completely bound openings. (This may involve adjacent flexible items, or a flexible and a rigid item, such as a chain or rope on a climbing ramp).

Openings between flexible parts of suspended bridges and any rigid side members shall not be less than 230 mm in diameter under the worst case of loading. Such openings should be tested both loaded and unloaded.

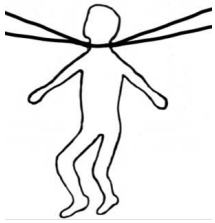

Figure 21 – Example of flexible members creating entrapment

Clothing entrapment

Hazardous situations where items of clothing can be caught while the user is undergoing forced movement (e.g. sliding) should be avoided.

Possible situations in which clothing entrapment can be encountered are as follows:

a) Gaps or V-shaped openings in which a part of clothing can become trapped while or immediately before the user is undergoing forced movement (e.g. sliding);
b) Protrusions (e.g. sharp edges on which clothing could be caught); and
c) Spindles/rotating parts (such items should be free of any protrusions that could catch on clothing while in use).

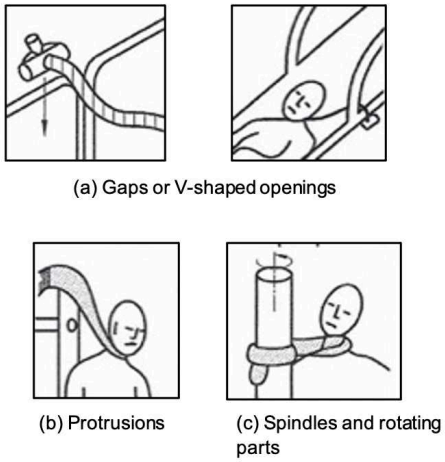

Figure 22 – Examples of situations which may create clothing entrapment hazards

<u>Test procedure (gaps & V-shaped openings)</u>

Gaps and V-shaped openings in the free space are tested using the toggle test device (see Figure 23).

This test is applied to the free space of slides, fireman's poles and roofs (which may provide a hazard if a user were to access and slide off whilst an item of clothing was trapped).

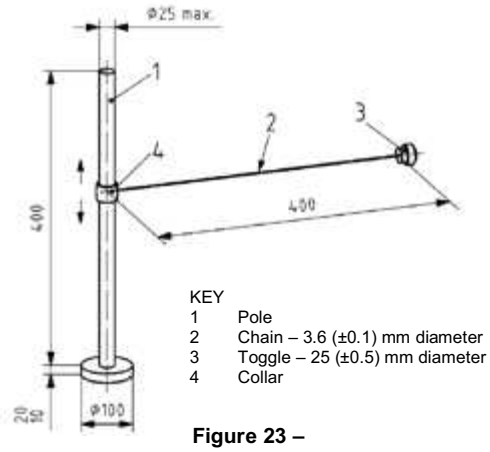

Figure 23 – Test device – toggle test

SLIDES

Position the test device perpendicularly in the starting section of the slide, 200 mm from the transition point of the starting section, and in the centre of a narrow slide or 200 mm from the edge of a wide slide (see Figure 24).

Moving the test device in the direction of forced movement, randomly place the toggle and chain under the action of its own weight to all positions within the range, without applying additional force or influence (this is to replicate the natural motion of a clothing toggle).

In the event that the test device is obstructed, apply a maximum force of 50N in the direction of the forced movement. If the toggle is released this position within the equipment passes the test.

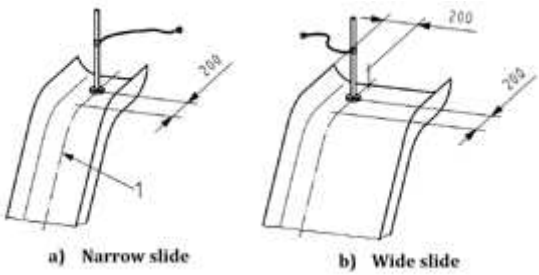

Figure 24 – Position of test device on slides

FIREMAN'S POLES

Conduct the test using the testing device in two different positions:

(i) Position the complete device vertically at the edge of the platform at the point closest to the fireman's pole.

(ii) Detach the toggle, chain and collar from the device and position it so that it is at a point 1.8m above the surface of the adjacent platform, or the highest point on the pole if it extends less than 1.8m (see Figure 25).

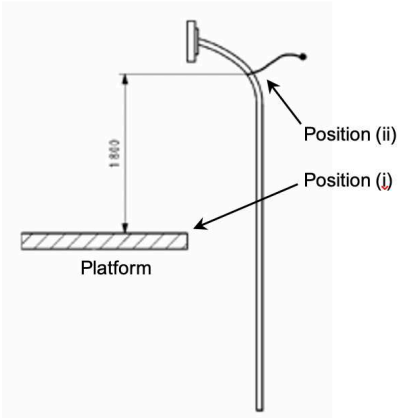

Figure 25 – Position of test device on fireman's poles

Randomly place the toggle and chain under the action of its own weight to all positions within the range, without applying additional force or influence. Apply this test down the length of the fireman's pole to a point 1.2m above ground level.

In the event that the test device is obstructed, apply a maximum force of 50N in the direction of the forced movement. If the toggle is released this position within the equipment passes the test.

ROOFS

Detach the toggle, chain and collar from the device. Randomly place the toggle and chain under the action of its own weight to all positions at the apex or along the surface of the roof, without applying additional force or influence.

If the toggle or the chain resists removal, apply a maximum force of 50N in the direction of any potential sliding movement of the user. If the toggle is released this position within the equipment passes the test.

Entrapment of the whole body

Equipment shall be constructed in such a way that the following situations, which may cause entrapment of the whole body, are not created:

a) Tunnels into which children can crawl with their whole body (see requirements in Table 7).

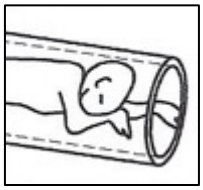

Figure 26 – Tunnels

Table 7 – Requirements for tunnels

	Open one end	Open both ends			
Inclination	≤ 5° (upwards from entry only)	≤ 15°			> 15° (should include steps or handles)
Maximum length	≤ 2000 mm	≤ 1000 mm	≤ 2000 mm	NONE	NONE
Minimum internal dimension (at narrowest point)	≥ 750 mm	≥ 400 mm	≥ 500 mm	≥ 750 mm	≥ 750 mm

b) Suspended parts which are heavy or have rigid suspension (where the dimension of the gap changes during use, creating a potential crush point). Heavy suspended beams (weighing more than 25kg) should have a ground clearance of at least 400 mm.

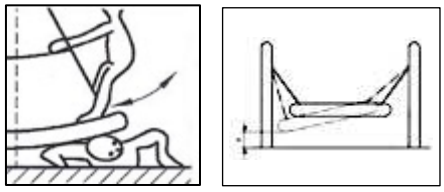

Figure 27 – Suspended parts

Foot or leg entrapment

The surfaces of equipment on which children can run or climb should be constructed in such a way that the foot or ankle cannot become trapped while in motion.

Gaps on surfaces intended for running or walking shall not contain gaps greater than 30 mm when measured across the direction of travel. This requirement does not apply to surfaces inclined more than 38°.

Wider gaps across the path of travel are acceptable as long as they do not conflict with the requirements for head/neck entrapment.

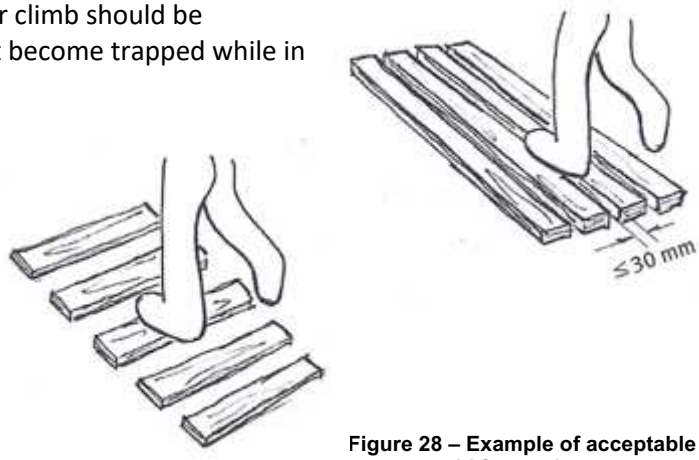

Figure 28 – Example of acceptable gaps to avoid foot or leg entrapment

Finger entrapment

The following situations that can create finger entrapment hazards and should be tested in accordance with the test procedure below:

- Gaps within the free space in which fingers can be trapped whilst the remainder of the body is moving or continues in forced movement (e.g. sliding or swinging).
- Openings or holes that have a lower edge more than 1000 mm in height, and where there is a potential fall to an impact area below.
- Chains and chain connectors.
- Variable gaps whose dimensions change during use of the equipment (e.g. boards on clatter-bridges and hinged gates).

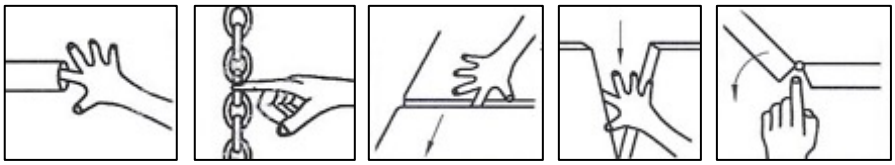

Figure 29 – Examples of situations that may cause finger entrapment

<u>Test procedure</u>

Gaps, openings and holes

If the 8 mm finger probe passes through the opening, the 25 mm probe shall also pass though. If the 25 mm rod does not pass through, the opening is a potential finger entrapment hazard. (This test only applies where there is a potential fall onto an impact area below.)

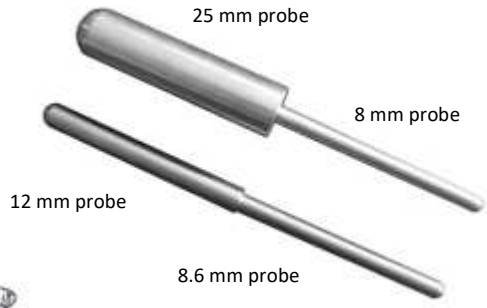

Figure 30 – Finger probes

Chains & connections

Chains shall have a maximum opening of 8.6 mm in any one direction, except where connections are made, where the maximum opening must be less than 8.6 mm or greater than 12 mm.

Variable gaps

Gaps whose dimensions change during use of the equipment shall have a minimum dimension in any position of 12 mm.

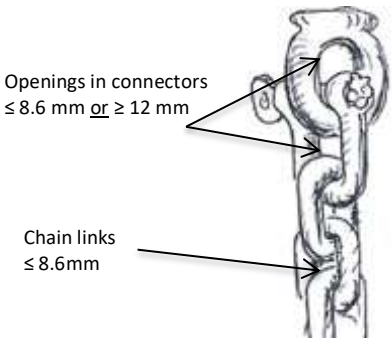

Figure 31 – Allowable openings in chains & connectors

Protrusions and finish of equipment

Protrusions

Corners, edges and projecting parts within the space occupied by the user that protrude more than 8 mm and which are not shielded by adjacent areas that are within 25 mm from the end of the projecting part shall be rounded off. The minimum radius of the curve shall be 3 mm.

If these edges or projecting parts are not within the space occupied by the user, even if they are accessible, this 3 mm radius is not necessary as long as the parts are not sharp.

Protruding bolt threads within any accessible part of the equipment shall be permanently covered, e.g. dome headed nuts, or security caps. (Figure 32 shows examples of protection for nuts and bolts.)

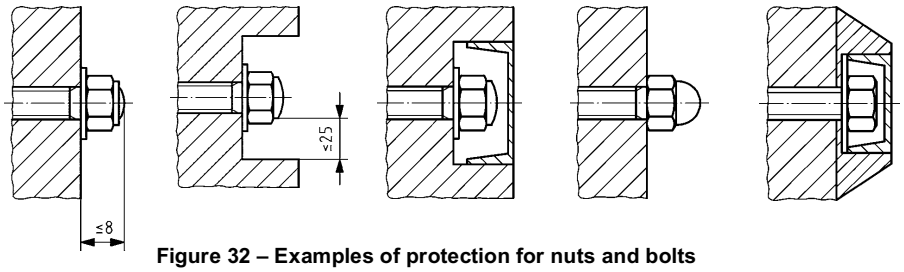

Figure 32 – Examples of protection for nuts and bolts

Obstacles that could cause injury if hit by a user should not be present in traffic areas on or around the equipment. (Figure 33 provides examples of such obstacles.)

Figure 33 – Examples of obstacles that could cause injury

Finish of the equipment

Timber equipment should be made of timber with a low susceptibility to splintering. Other materials (e.g. fibreglass) should be non-splintering. Rough surfaces should not present a risk of injury.

There shall be no protruding nails, wire rope terminations or pointed or sharp-edged components. Equipment shall be free from burs and all welds ground smooth.

Connections shall be secured so that they cannot come loose of their own accord, unless specifically designed to do so, and shall be safeguarded so that they cannot be undone without the use of tools.

Track Rides

The platforms on either end of track rides are required to have impact attenuation on the leading edge of the platforms.

Rocking equipment

The ends of footrests and hand supports on spring equipment should have a minimum cross-section of at least 44 mm. (The intention of this requirement is to reduce the risk of eye injury.)

Any projecting parts of the side profile, which could be impacted by children passing by or when using the rocker shall have a radius of at least 20 mm.

Moving parts

Chain links

Chain links should be checked for wear on a regular basis. Before the wear reaches 40% of the diameter of the link the chain should be replaced.

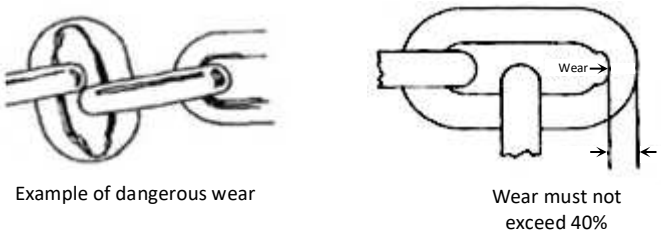

Figure 34 – Example of wear in chain links

Crushing & shearing points

There shall be no crushing points or shearing points between moving and/or stationary parts of the equipment. For the purposes of the Standard the following definitions apply:

- Crushing point – a place where parts of the equipment can move against each other, or against a fixed area so that persons, or parts of their body, can be crushed.
- Shearing point – a place where part of the equipment can move past a fixed or other moving part, or past a fixed area so that persons, or parts of their body, can be cut.

Parts of the equipment from which a high impact force can emanate should have an attenuating construction.

Where moving parts could trap the user between the equipment and the surface below there shall be a ground clearance of at least 400 mm. Any exceptions to this requirement are detailed under subsequent headings.

Means of 'easy access'

Stairs

To provide adequate space for standing, the minimum projection of tread shall be 140 mm and the minimum depth of tread shall be 110 mm (see Figure 35). The height of the riser is not stipulated but should be constant across the stairs. Any openings should conform with the entrapment requirements detailed in this document.

Where the overall height of the set of stairs is more than 2000 mm, intermediate landings shall be provided at height intervals not exceeding 2000 mm. Intermediate landings shall be at least as wide as the set of stairs and at least 1000 mm long.

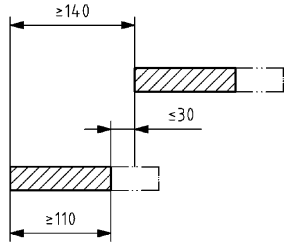

Figure 35 – Sliding sections

Ladders

Ladder rungs should be equally spaced. This requirement does not apply between the highest rung and the platform or the ground and the first rung.

To allow for the foot to rest correctly on the rung or step there shall be an unobstructed space at the rear of the ladder of at least 90 mm from the centre of the rung or tread measured at 90° to the ladder.

Ramps

Ramps can be inclined at an angle of up to 38° to the horizontal. Items that are inclined at an angle exceeding 38° are considered to be climbing equipment.

To reduce the risk of slipping, ramps should include means to improve the grip of the foot.

Guidance for limits of slope – ladders, stairs and ramps

Figure 36 provides guidance for recommended limits of slope for various means of easy access (stairs, ramps & ladders).

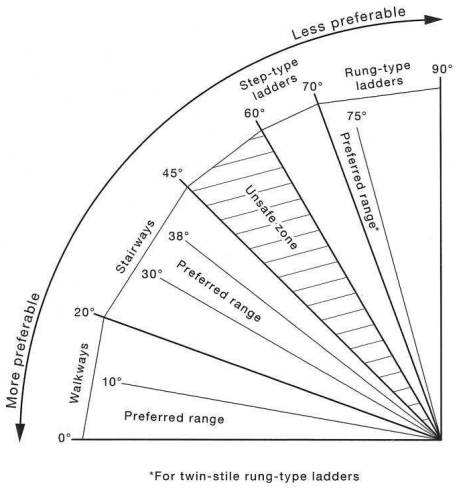

Figure 36 – Guidance for limits of slope

Specific requirements for Swings

GROUND CLEARANCE

Standard swing seats shall have a minimum ground clearance at rest position of 400 mm. The minimum ground clearance for basket swing seats (or group swing seats) is 400 mm from the underside of the outer ring, when measured at the lowest point through the arc (see Figure 37). For vertical tyre seats the minimum clearance is 100 mm (this is due to the fact that their construction is flexible, and the tyre is made from impact attenuating material). These clearances are a minimum and may be greater having consideration to such things as the average age of intended users.

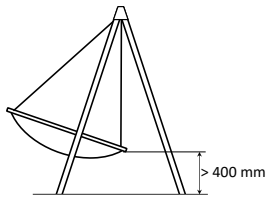

Figure 37 – Clearances for basket (group) swings

In the case of single point swings (see Figure 38), a minimum clearance of 400 mm also applies to the supporting legs of the frame. The swing seat may come into contact with the main swing beam, in which case protective material may be fitted to protect the beam.

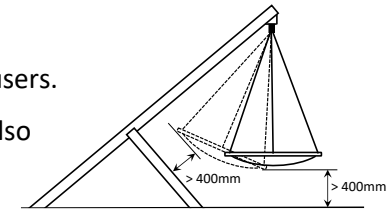

Figure 38 – Clearances for single point swings

MINIMUM SPACE BETWEEN SWING SEATS & FRAMES

The minimum horizontal dimension between the side of the swing seat (when in the rest position) and the adjacent structure is calculated as 20% of the length of the suspension member plus 200 mm (or + 400 mm in the case of basket swings).

The minimum horizontal dimension between adjacent swing seats (when in the rest position) shall be 20% of the length of the suspension member plus 300 mm.

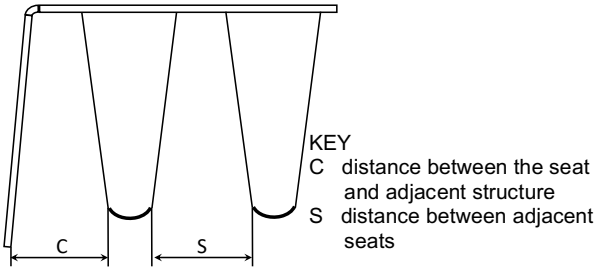

Figure 39 – Minimum space between swing seats and adjacent structure

LATERAL STABILITY OF SWING SEATS

The distance between the suspension members of standard swings at the point of connection to the top bar shall be at least the width of the swing seat (or the distance between the support points on the swing) plus 5% of the length of the suspension member (or plus 30% in the case of basket swings).

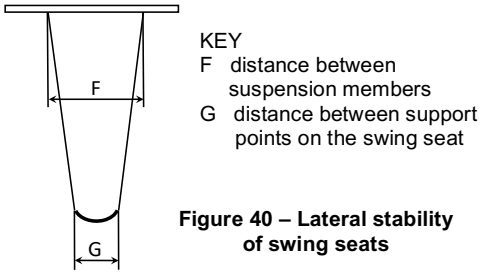

Figure 40 – Lateral stability of swing seats

CONTACT SWINGS

The minimum distance between the seat surface and the central axis of the swing shall be 400 mm when the seat is extended at an angle of 90° (see Figure 41).

The distance between the suspension members of contact swings at the point of connection to the top bar shall be at least the width of the swing seat plus 30% of the length of the suspension member.

Seats shall be constructed to discourage jumping from them toward the central axis while swinging. This can be achieved by using a vertical tyre or a restraining bar.

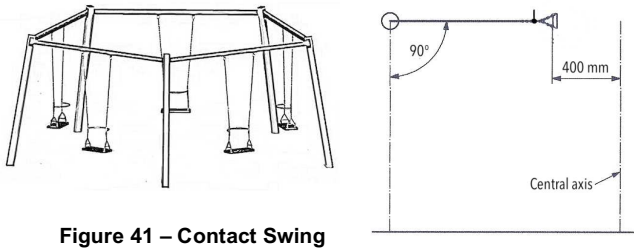

Figure 41 – Contact Swing

SUSPENSION JOINTS ON SINGLE-POINT & BASKET SWINGS

Connections between the chains/cables and the supporting structure on single point swings and basket swings (or group swing seats) shall have a secondary means of supporting the swing seat to prevent collapse if the primary joint between the chains/cables and the supporting structure collapses (this requirement can be omitted in the case of universal joints that are specifically designed and engineered for the purpose).

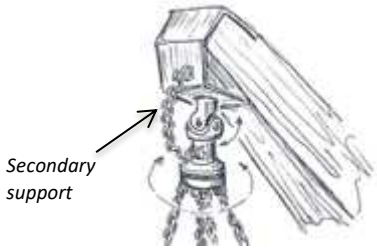

Figure 42 – Secondary means of support on single point & basket swings

FRAMEWORK

Swings with more than two seats shall be divided by construction parts into bays so that there are no more than two seats per bay. (This is to discourage children from crossing the path of swings in use.) In the case of basket swing seats, no other seats are permitted in the same bay.

Swing frames or their top bar should only be attached to other equipment where specific measures have been taken to segregate them from other activities (e.g. barriers or enclosures).

Specific requirements for Slides

SLIDE DESIGN

Slides should have a starting section of at least 350 mm in length, with a downward slope tolerance not exceeding 5°. The platform at the commencement of the slide may be used as the starting section.

The angle of sliding section should not exceed 60° at any point and should not exceed an average of 40°.

The run-out section shall be inclined to 10° maximum, and at least the following length:

- 300 mm if the sliding section is < 1500 mm in length.
- 500 mm if the sliding section is between 1500 mm and 7500 mm in length.
- 1500 mm if the sliding section is > 7500 mm in length.

The width of the sliding section should be either less than 700 mm or greater than 950 mm.

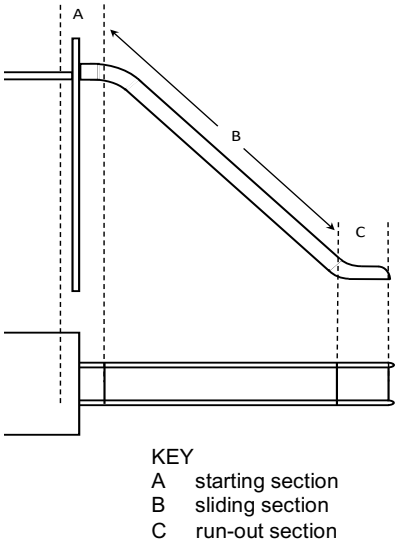

Figure 43 – Sliding sections

The sides of the sliding section shall have heights in accordance with the following:

- FHoF ≤ 1200 mm – sides should be at least 100 mm in height
- FHoF > 1200 mm & ≤ 2500 mm – sides should be at least 150 mm in height
- FHoF > 2500 mm (or 2000 mm when 'easily accessible') – sides should be at least 500 mm in height

For attachment slides where the starting section extends more than 200 mm beyond the platform edge, the guarding section (sides) shall have a height of at least 500 mm at some point.

TUBE SLIDES

While the outside of a tube slide is not intended for climbing, it is common that these slides are used by children to scale to higher parts of the playground. For this reason, a physical barrier shall be provided to significantly reduce the likelihood of climbing on the outside of a tunnel slide to a height in excess of the maximum free height of fall.

That portion of the tube slide below the barrier should have its own impact area with impact attenuating surfacing suitable for the respective fall height.

Foundations

Foundations shall be designed in such a way that they do not present a hazard (i.e. tripping, impact). In loose fill surfaces the foundations shall be laid in accordance with the one of the following requirements (as illustrated in Figure 44):

a) footings and fixing elements are at least 400 mm below the playing surface; or
b) the tops of the foundations must be at least 200 mm below the surface if the top is rounded with a radius of 100 mm and tapered; or
c) the footings are covered by items of equipment or equipment parts (e.g. the central foundation of a carousel).

Any parts that protrude from the foundations shall be at least 400 mm below the playing surface unless they are effectively covered.

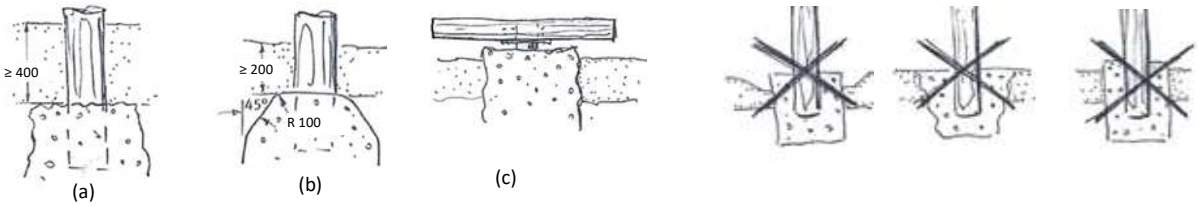

Figure 44 – Example of foundations

Equipment identification and marking

Items of playground equipment shall be marked legibly, permanently and in a position visible from ground level with at least the following:

- Name, address and ABN of the manufacturer, importer or supplier.
- Equipment reference and year of manufacture.
- The designation (number and date) of this Australian Standard, i.e. AS 4685.1:2020, and any other applicable part of the AS 4685 series.

A finished ground level mark shall be placed on the equipment to identify correct impact attenuation surface levels.

Supervised Early Childhood (specific requirements)

The following variations in the playground Standards apply to equipment in SECS settings. All other general requirements of the Standards, as detailed in this document, are applicable in these settings.

Free height of fall

The maximum FHoF for equipment in SECS settings is 1.8m.

Protection against falling

When single handrails are used in SECS settings, they shall be not less than 450 mm and not more than 700 mm above the foot position. This requirement does not preclude the use of two or more handrails.

Moveable Play Equipment

Moveable play equipment is defined as a range of purpose-made manufactured equipment used in Supervised Early Childhood settings that is not permanently fixed in place and is designed to be adjusted and moved by educators on a regular basis to vary play opportunities.

The free height of fall for moveable play equipment shall not exceed 1500 mm.

A minimum impact area of 1500 mm covered/filled with a compliant impact attenuating surface shall apply for moveable play equipment items that measure more than 600 mm from ground level.

Moveable play equipment items do not require handrails, guardrails or barriers.